Burner applications - Ratio Control

Application note A007-CM04-0117B

- Furnace applications
- Welding equipment
- Cutting tools

Burners are usually found in welding, cutting or furnace applications. All these applications require an extremely efficient flame control. Gas flow has got a preponderant role on achieving good characteristics of combustion flame.

Hence optimal flow control is required. Bronkhorst is fully aware of the demands involved and has developed throughout the years unique solutions for burner applications.

Burner control for lightbulbs

Application requirements

For these processes the pressure of the gas is critical. Pressure irregularities may cause the flame to be extinguished or increase the resultant amount of NOx. Usually the MFCs must operate with very low backpressures. Burner manufacturers want customised pre-tested solutions, instruments with digital (bus) communication and easy to start-up. Flame arrestors may be required and can be supplied.

Important topics
- Accurate dosing of exhaust gas constituents
- Stability
- Flexibility

Process solution

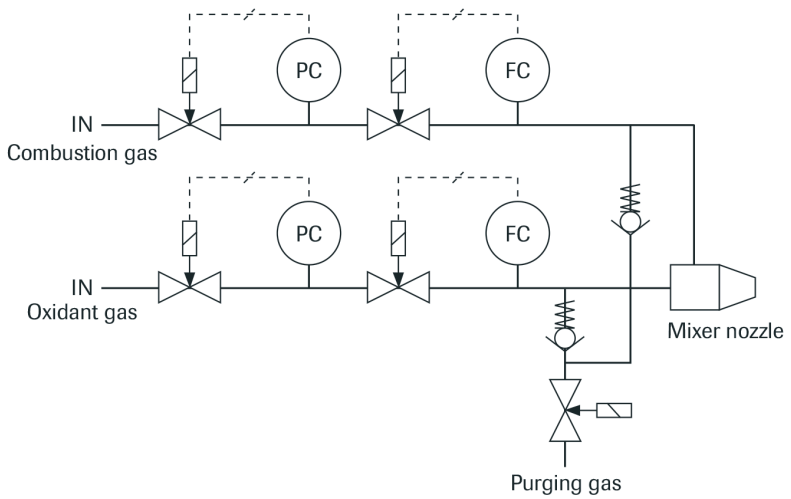

Flow scheme

Burner Ratio Control

For every burner application two flow gases are required: the fuel (methane, propane or acethylene) and the oxidant (air or oxygen).

In order to attain an ideal combustion flame and maintain its dynamic behaviour constant, it is crucial to control accurately the ratio between both gases. The necessary stechiometry of air must be guaranteed, otherwise security may be compromised.

At the same time, and to avoid excessive fuel spendings and to downplay NOx emissions, it should be possible to use the minimum required air amount.

The solution presented can successfully deliver proportional gas flow respecting the necessary stability. As the combustion gas is supplied by a MFC (Master), the oxidant gas is delivered accordingly in the correct proportion by another MFC (Slave), in such way successful ratio control is accomplished.

The instruments do have a fast response time which, together with a unique stability guarantees flame's constancy. ■

Bronkhorst®

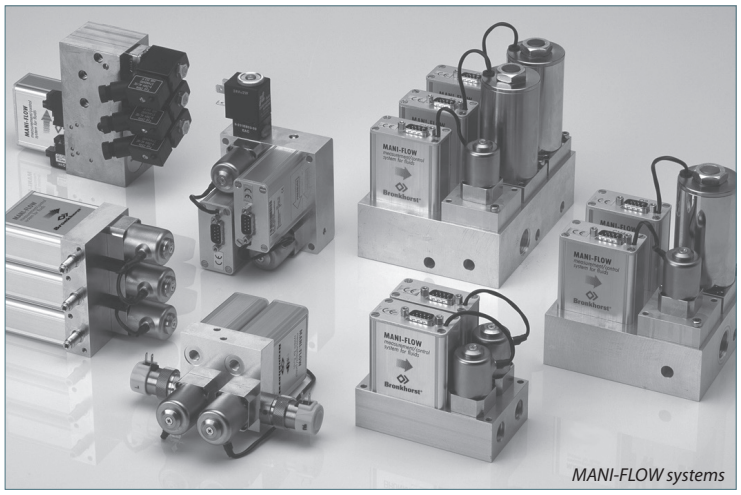

MANI-FLOW systems

Recommended Products

	LOW-ΔP-FLOW Thermal Mass Flow Meters and Mass Flow Controllers with analog or digital output, for low pressure drop (ΔP) or corrosive gas service. With laboratory or industrial style (IP65) housing. Elastomer sealed. Flow ranges from 0-10 mln/min up to 1000 m3 n/h air-equivalent.	◆ Very low pressure drop ◆ Longer lifetime when used on corrosive gases ◆ Lower contamination risk ◆ Easy to clean ◆ Electro-polished stainless steel wetted parts ◆ Available with control valve to constitute a complete, compact control loop ◆ Available with industrial (IP65 weatherproof) housing
	LOW-ΔP-FLOW with Badger valve For control applications normally an MFC with integrated control valve will be preferred, because it is the most compact and economical solution. Sometimes, however, a separate control valve could be more practical or offer technical advantages. We can offer several comprehensive solutions suited to comply with process parameters.	◆ Technical solution ◆ Low pressure drop ◆ Also available in a compact, IP65 housing ◆ Analog and digital (fieldbus) communication ◆ Fast response, excellent repeatability ◆ Stability ◆ Quality
	MANI-FLOW Combines various functions into one compact device. On a compact manifold one or more mass flow or pressure sensors modules can be combined with control valves, two- or three-way valves, shut-off valves, filters or any other functional module as per customer's request.	◆ Compact assembly ensures space efficiency ◆ Economical solution, low cost of ownership ◆ Combination of functions on one manifold reduces potential leak points ◆ Modular construction enables easy exchange of functional modules ◆ Pre-tested 'Plug and Play' units, reducing custom testing requirements ◆ Analog and digital (RS232, RS485) communication

Contact information

Bronkhorst®

T +31(0)573 45 88 00 **F** +31(0)573 45 88 08
I www.bronkhorst.com **E** info@bronkhorst.com

Burner applications - Ratio Control

A007-CM04-0117B

CM: Chemical, Metal & Glass
04: Iron, Steel & Metal Industry